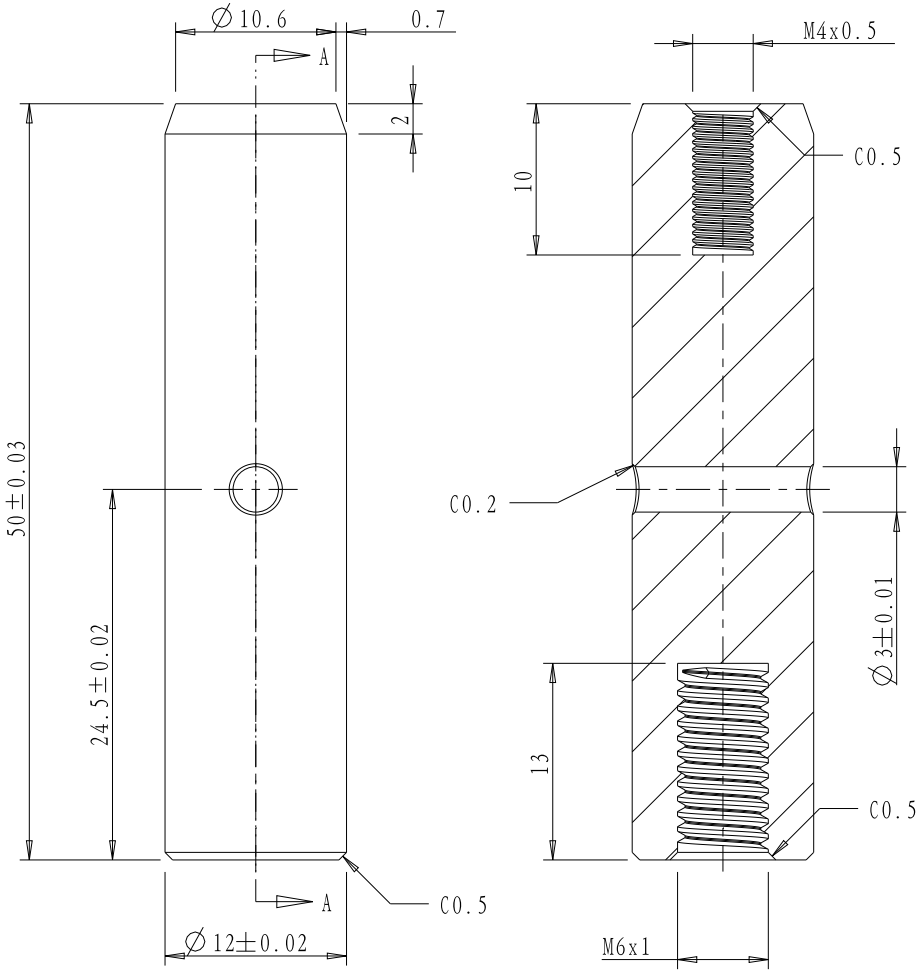

截面 A-A

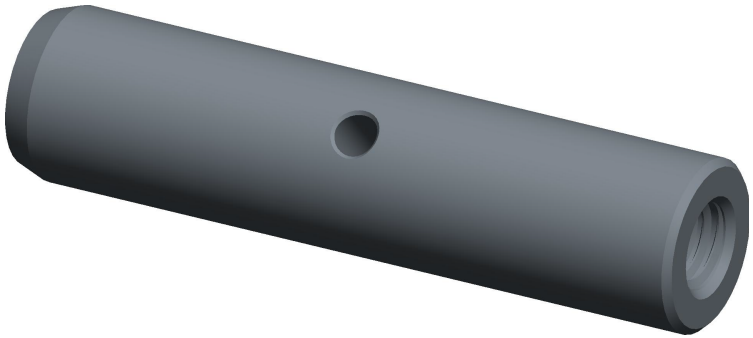

DRAWING PROJECTION		Oeabt Optics Experiment and Basic Teaching	
DATE	04/09/19		
PCA5-S			
www.Oeabt.com	MATERIAL #		REV
COPYRIGHT © 2019 BY Oeabt			A
VALUSE IN PARENTHESIS ARE CALCULATED AND MAY CONTAIN ROUNDOFF ERRORS		APPROX WEIGHT	kg